Electrolux PROFESSIONAL

Warewashing
Green&Clean Large Opening Hot Water Sanitizing Pot and Pan Washer - WT850

ITEM #

MODEL #

NAME #

SIS #

AIA #

506033 (WT850M208U) Large Opening Electric Pot and Pan Washer - 208V/3/60Hz

Short Form Specification

Item No.

Unit to be Electrolux Professional WT850 Large Opening Hot Water Sanitizing Pot and Pan Washer. Electrical characteristics to be ___ 208 V three phase operation with four automatic cycles of 6, 10, 15 minutes and continuous. Constant rinse temperature of 180°F and rinse pressure guaranteed by built in hot water booster heater and built-in rinse water booster pump. Wash Safe Control ensures that the correct water temperature and pressure are maintained during the rinse phase for perfect rinsing performance regardless of the network's water pressure (min 7 psi) Washing performance is guaranteed by a 7.0 HP wash pump, upper and lower revolving washing spray arms as well as lateral spray arms. Wash water pressure can be regulated between top and bottom washing arms. 304 stainless steel construction to include frame, wash tank, booster tank and side panels.

Covered by Electrolux Professional Platinum Star® Service Program two-year parts and one-year labor warranty, installation start-up and performance check-up after one year from installation.

Main Features

- Atmospheric insulated boiler combined with the rinse booster pump for perfect rinsing results (water temperature and pressure always constant during rinsing cycles), independent from the inlet water pressure.
- Green light of "WASH SAFE CONTROL" confirms that items have been rinsed properly.
- High efficiency air gap (class A) in water inlet circuit to avoid water being siphoned back into the network as a result of a sudden drop in main pressures.
- Open air gap in compliance with WRC regulations.
- 4 washing programs (one program is continual).
- Equipped with drain pump and built-in detergent dispenser for easy and quick installation without opening the machine.
- Easier access to the washing chamber thanks to the 180° frontal opening door.
- Requires limited space for opening thanks to the door divided in 2 sections.
- Self-cleaning cycle.
- Low noise level.
- Simple electronic control panel.
- Fault auto-diagnosis system.
- Simple service from the front.

Sustainability

- Finished in top quality materials to ensure durability.
- Available upon request, pre-arranged model for HACCP implementation (both basic as well as integrated system).

Included Accessories

- 2 of Rack for 3 full-size sheet pans — PNC 864182
- 1 of Stainless steel basket for pot and pan washers, 65-1/8 " (1351mm) — PNC 864192

Optional Accessories

- - NOT TRANSLATED - — PNC 864471 ❑

APPROVAL:

Electrolux Professional, Inc.
www.electroluxprofessional.com
4003 Collins Lane Louisville, KY 40245 USA - fax number: 706-447-6228

Electrolux PROFESSIONAL
Green&Clean Large Opening Hot Water Sanitizing Pot and Pan Washer - WT850
Warewashing

Warewashing
Green&Clean Large Opening Hot Water Sanitizing Pot and Pan Washer - WT850

Front

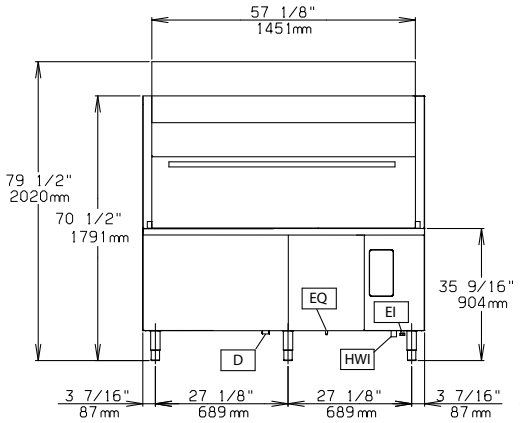

Side

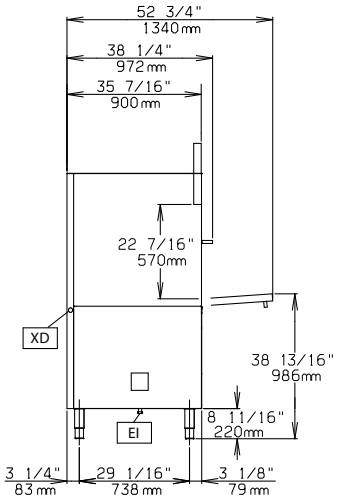

D = Drain
EI = Electrical connection
EO = Electrical Outlet
HWI = Hot water inlet

Top

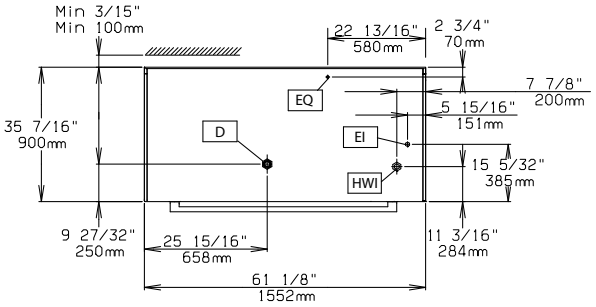

Electric

Supply voltage:	
506033 (WT850M208U)	208 V/3 ph/60 Hz
Total Watts:	17.5 kW
Booster heating elements:	
Tank heating elements:	10,5 kW
Wash pump size:	7.0 hp (5.4 kW)
Minimum current:	56A
Maximum Over-Current Protection (MOP):	60A
Minimum Circuit Ampacity (MCA):	62A

Water:

Water supply pressure:	7-102 psi (50-700 kPa)
Water supply temperature:**	122°F (50 °C)
	Colder incoming water supply may lengthen wash cycle time.
Inlet Water supply hardness:	7-14 (°fH) / 4-8 (°dH)
Water consumption per square foot of rack:	0.33 gallons (1.2 L)
Water consumption per cycle:	3.2 gallons (12 L)
Initial fill water consumption:	39.6 gallons (150 L)
Booster Capacity:	4.76 gal (18 L)
Tank Capacity:	39.63 gal (150 L)
Incoming water line size:	0.75" (19.05 mm)
Drain line size:	1.625" ID (40 mm) free fall drainage

Key Information:

Racks per hour:	10 (6 minute cycle); 6 (10 minute cycle); 4 (15 minute cycle)
N° of working cycles - sec.:	4 (360/600/900/inf)
Wash Temperature (MIN):	158 °F (70 °C)
Rinse temperature (MIN):	183.2°F (84°C)
External dimensions, Width:	61 1/8" (1552 mm)
External dimensions, Depth:	35 7/16" (900 mm)
External dimensions, Height:	70 1/2" (1791 mm)
Net weight:	661 lbs (300 kg)
Shipping width:	70 7/8" (1800 mm)
Shipping depth:	43 5/16" (1100 mm)
Shipping height:	86 5/8" (2200 mm)
Shipping weight:	849 lbs (385 kg)
Shipping volume:	153.81 ft³ (4.36 m³)

Predisposed for external detergent connections

Sustainability

Noise level:	<70 dBA

Intertek Intertek Intertek Intertek

The company reserves the right to make modifications to the products without prior notice. All information correct at time of printing.